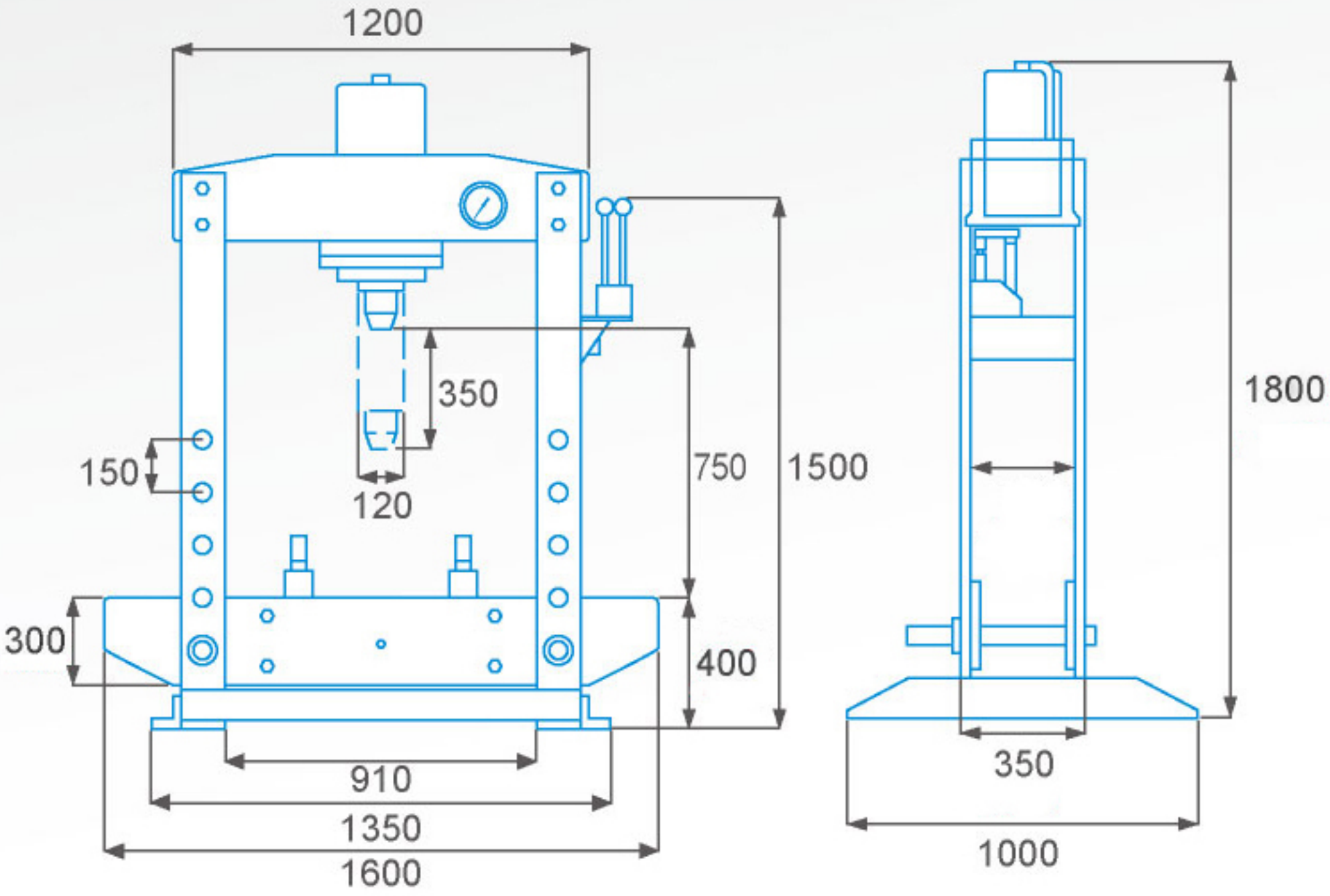
1200
350
150
120
750
1500
300
400
910
1350
1600
1800
350
1000